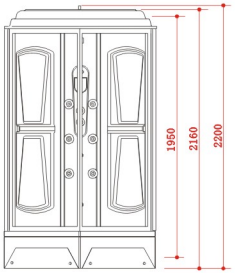

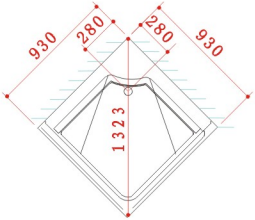

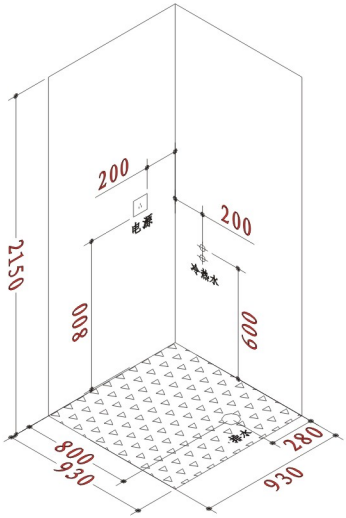

Model	Hot/cold water control	Change-over switch	Pedal drain	Hand shower	Top spray	Nozzle massage	Fan	Lamp	Leakage protection
W-1001	●	●	●	●	●	●	●	●	●
W-1002	●	●	●	●	●	●	●	●	●
W-1003	●	●	●	●	●	●	●	●	●
W-1005	●	●	●	●	●	●	●	●	●
W-1006	●	●	●	●	●	●	●	●	●
W-1007	●	●	●	●	●	●	●	●	●